CHANNEL TYPE: TMP-KAG BOTTOM OUTLET
TMP-KYG SIDE OUTLET

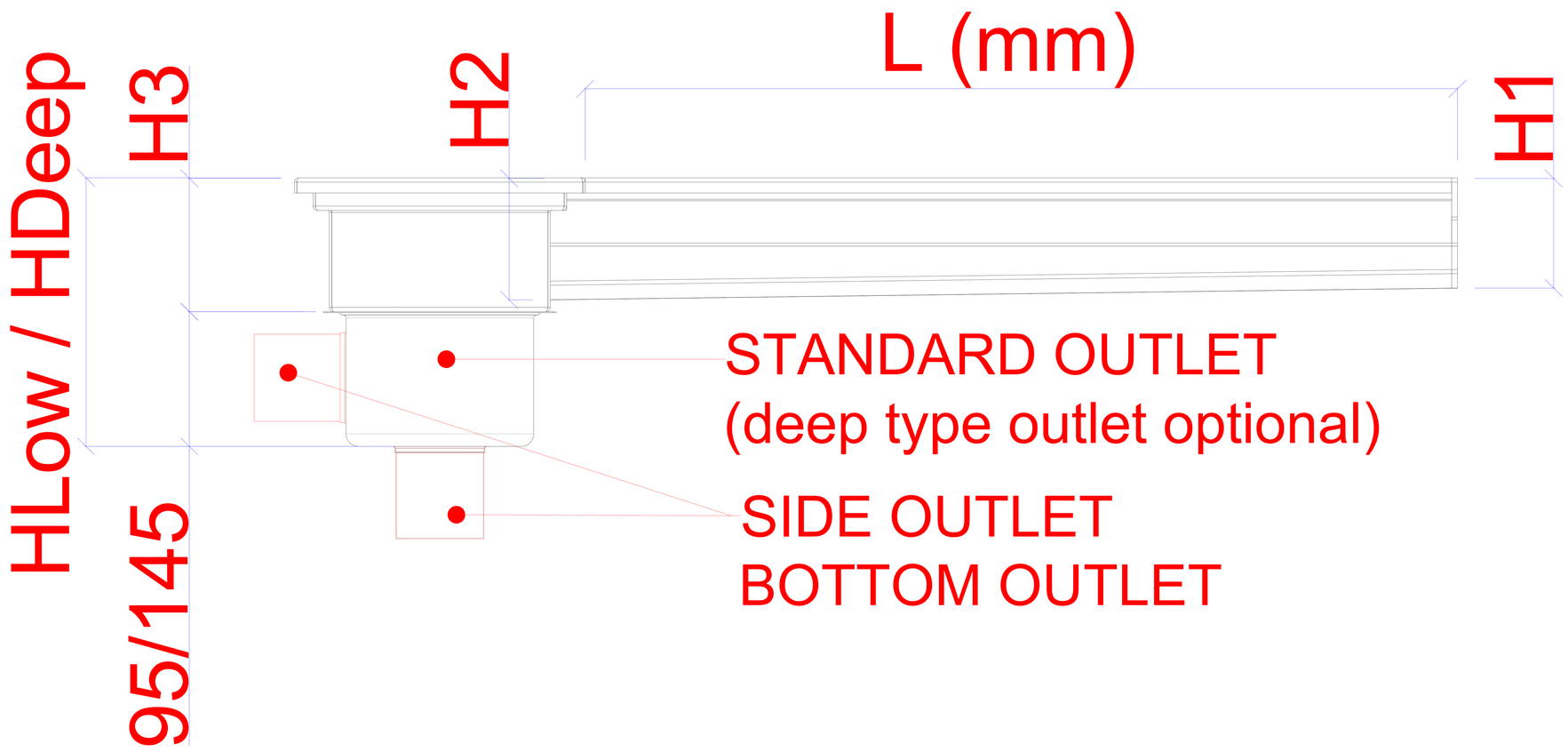

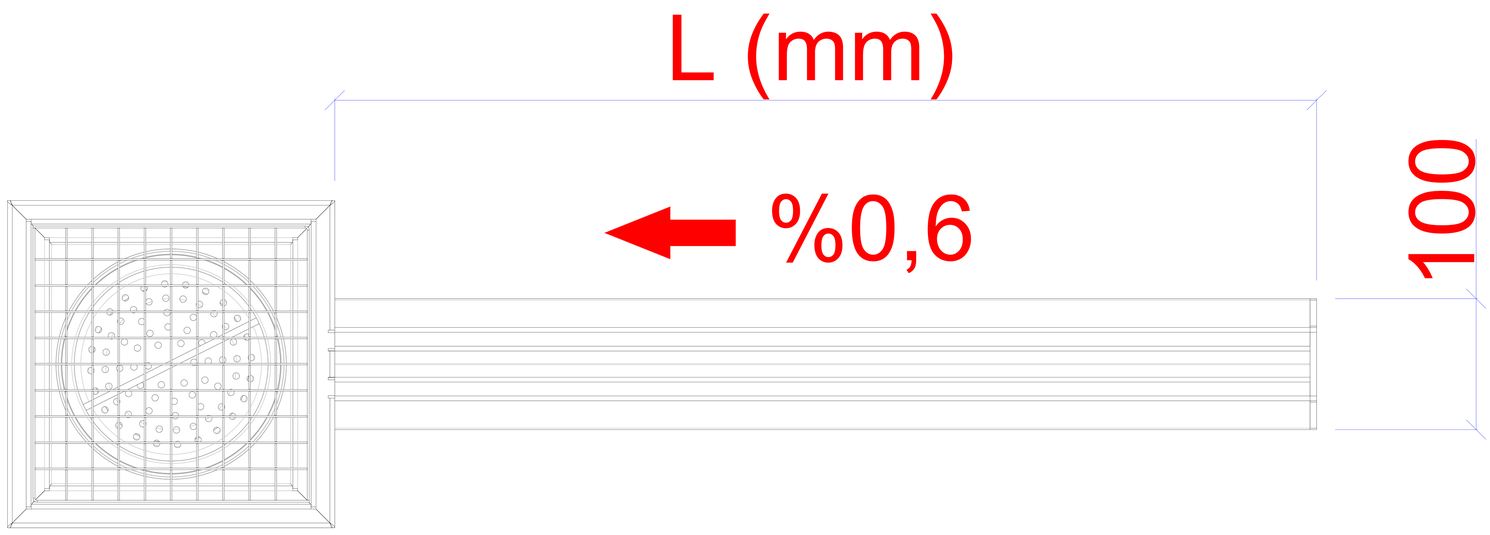

INFILL ELEMENT FOR REINFORCING THE FRAME (OPTIONAL)

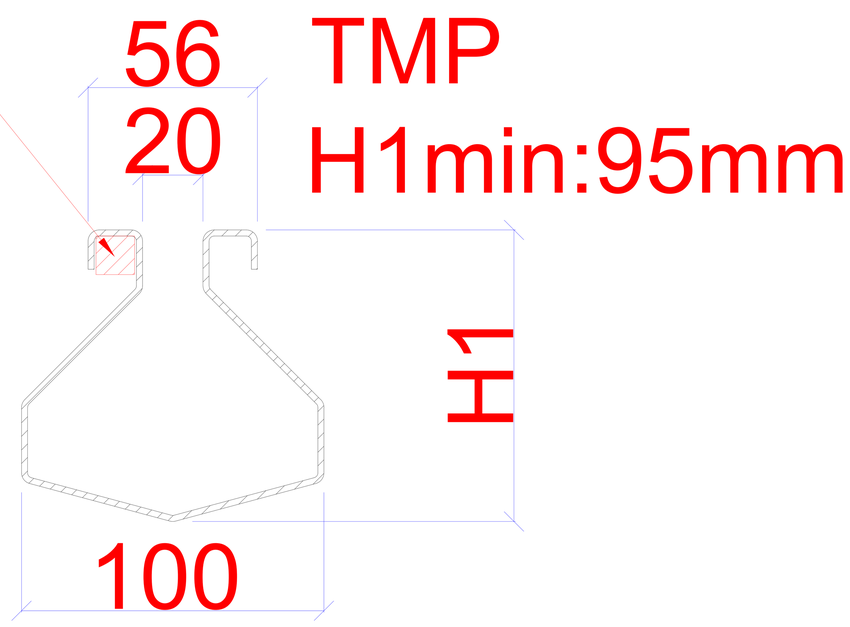

FENICROM®