CHANNEL TYPE: ISPK-KAG BOTTOM OUTLET
ISPK-KYG SIDE OUTLET

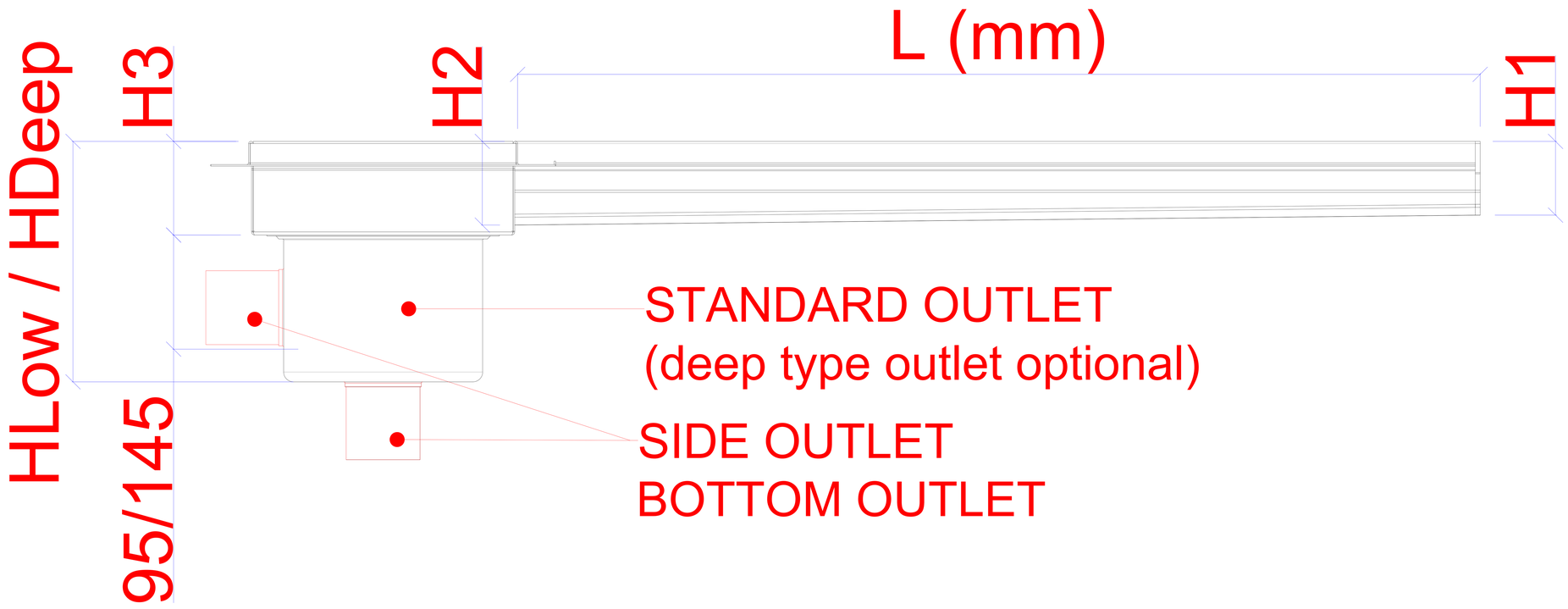

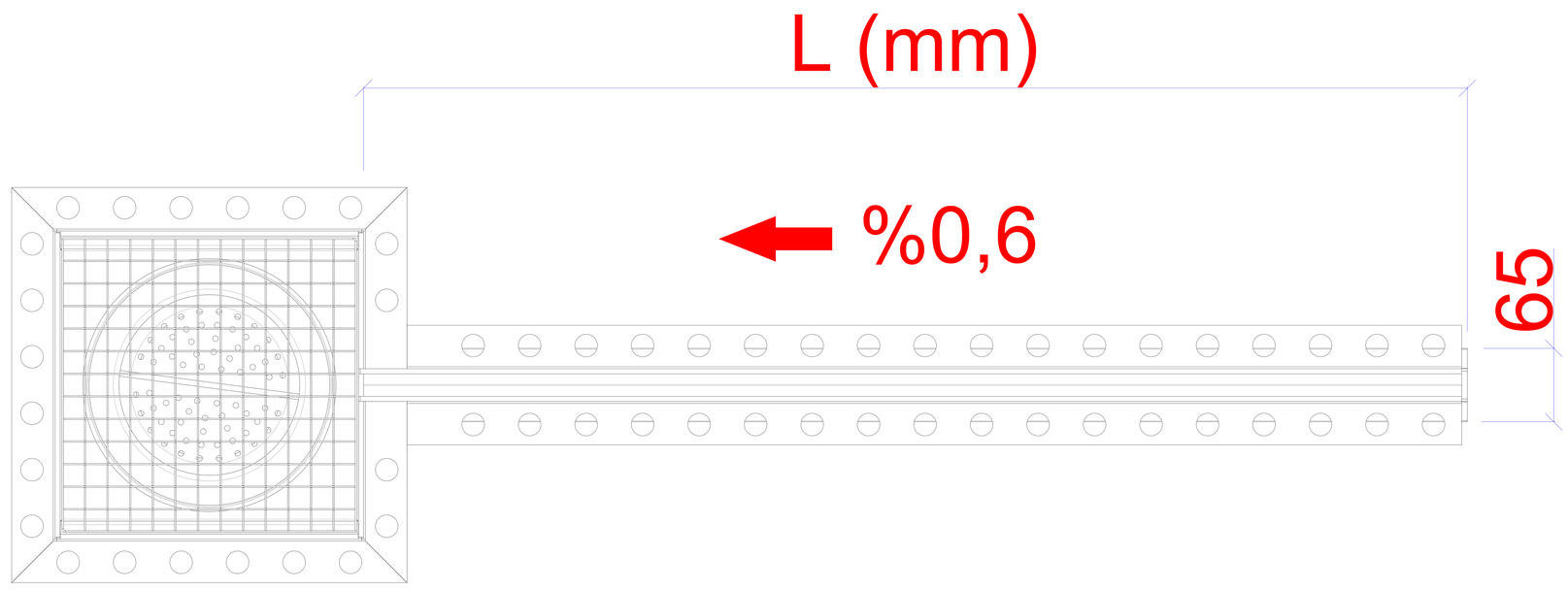

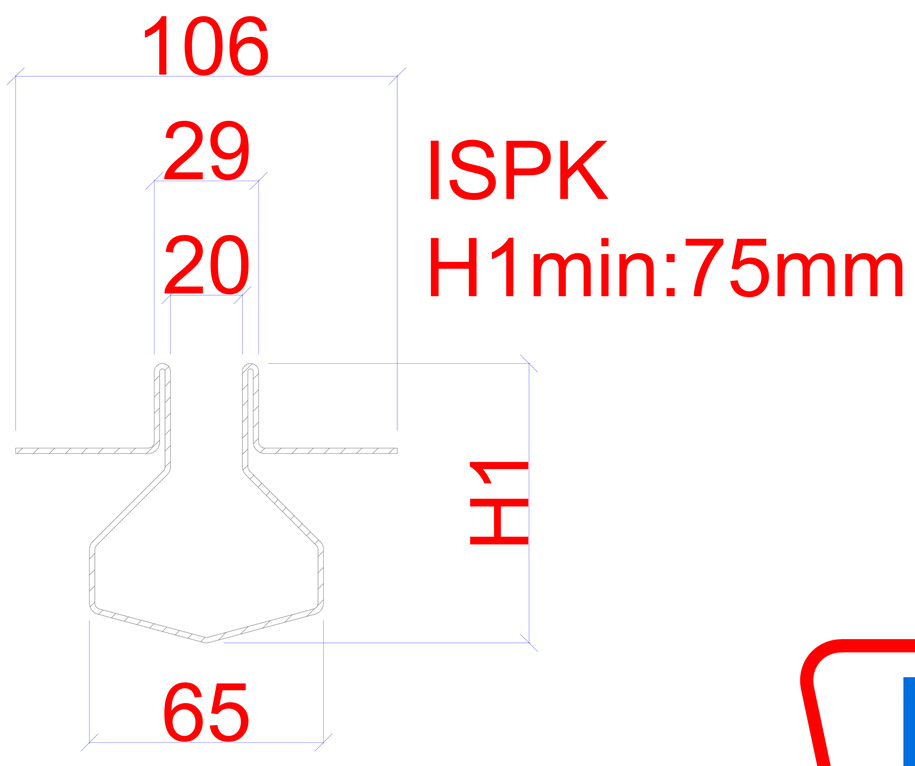

ISPK
H1min:75mm

FENICROM®