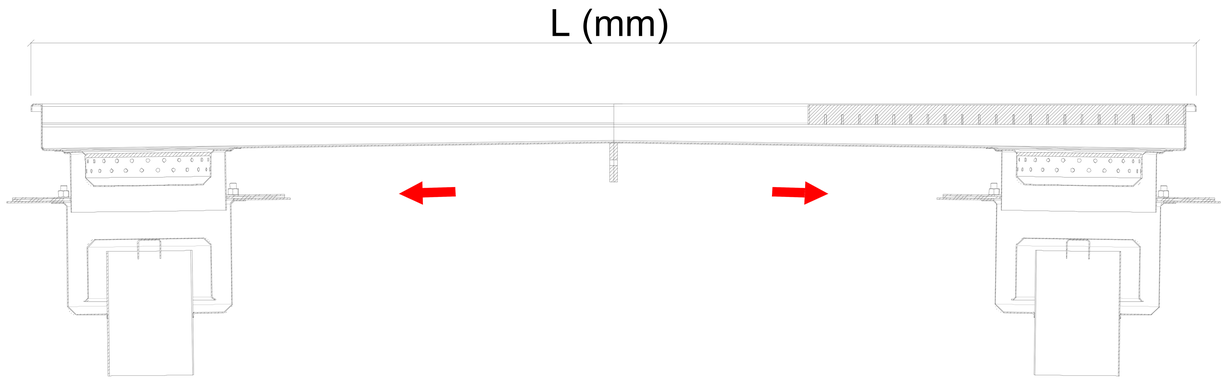

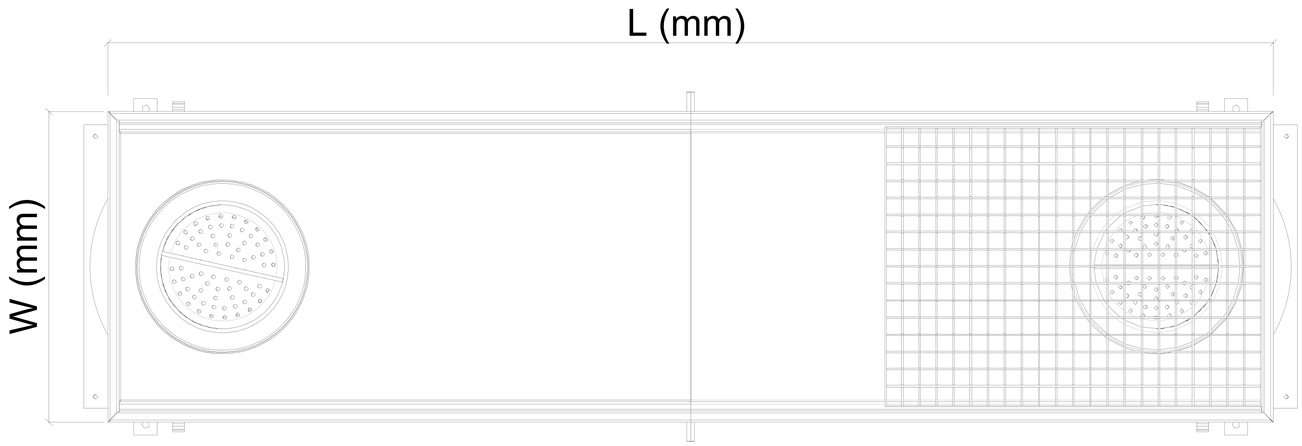

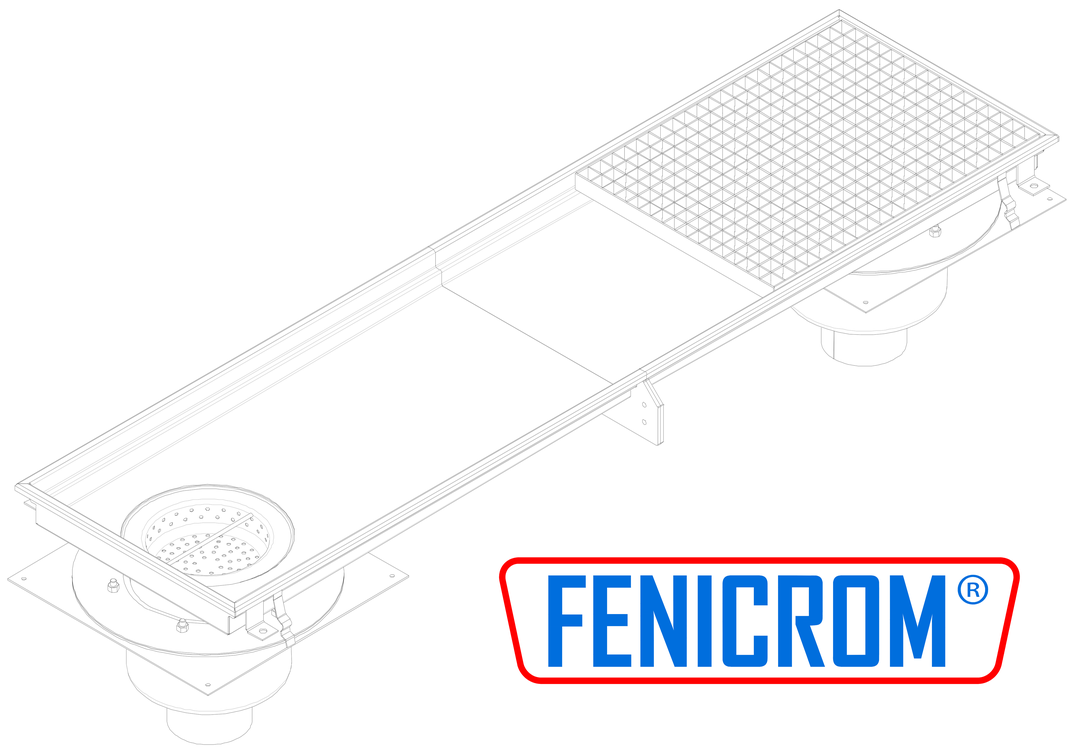

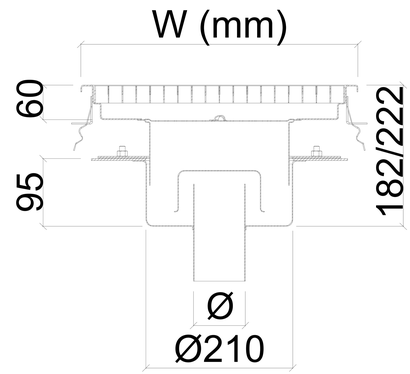

MODEL	W x L	H1-H2	Ø		
			DN50	DN70	DN100
DKA2G-426	400 x 2683	50-60	Ø50	Ø75	Ø110
DKA2G-429	400 x 2945				
DKA2G-431	400 x 3125				
DKA2G-433	400 x 3385				
DKA2G-435	400 x 3566				
DKA2G-438	400 x 3827				
DKA2G-440	400 x 4007				
DKA2G-442	400 x 4269				
DKA2G-444	400 x 4450				
DKA2G-447	400 x 4710				
DKA2G-448	400 x 4890				
DKA2G-451	400 x 5153				
DKA2G-453	400 x 5333				
Max. Flow Rate		lt / min	50	50	70
Waterseal Height			50mm		

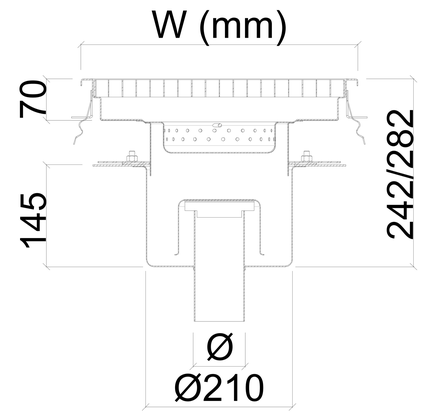

MODEL	W x L	H1-H2	Ø		
			DN50	DN70	DN100
DKA2G-426	400 x 2683	60-70	Ø50	Ø75	Ø110
DKA2G-429	400 x 2945				
DKA2G-431	400 x 3125				
DKA2G-433	400 x 3385				
DKA2G-435	400 x 3566				
DKA2G-438	400 x 3827				
DKA2G-440	400 x 4007				
DKA2G-442	400 x 4269				
DKA2G-444	400 x 4450				
DKA2G-447	400 x 4710				
DKA2G-448	400 x 4890				
DKA2G-451	400 x 5153				
DKA2G-453	400 x 5333				
Max. Flow Rate		lt / min	50	50	70
Waterseal Height			60mm		

APPLICATION DRAWING

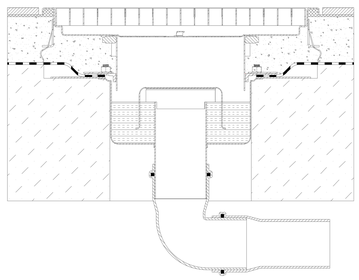

OPTIONAL

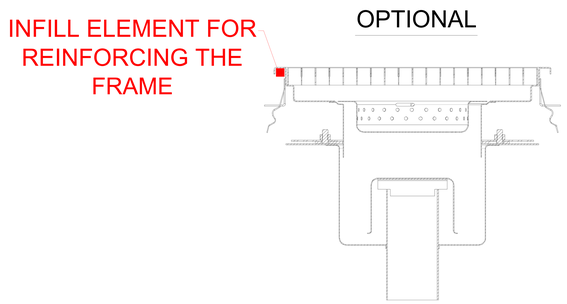

FENICROM®