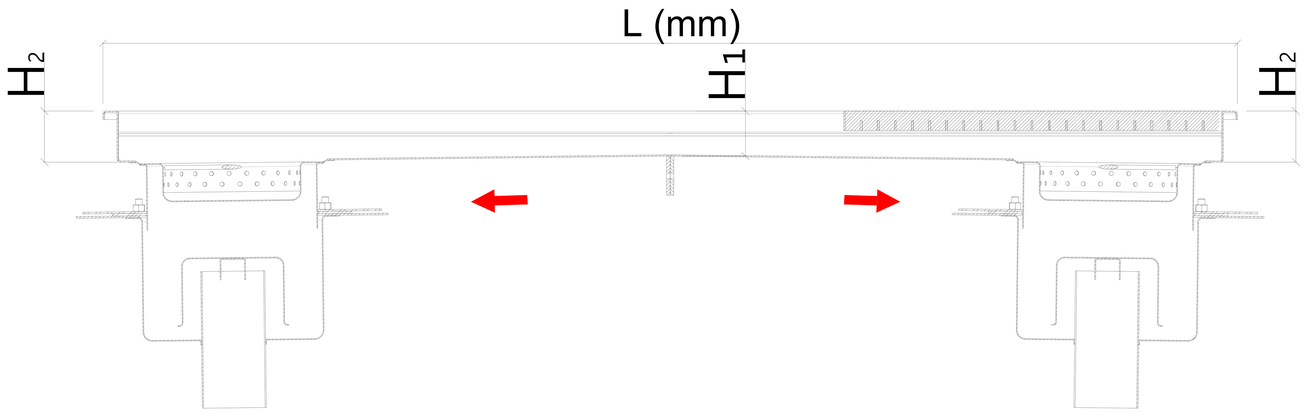

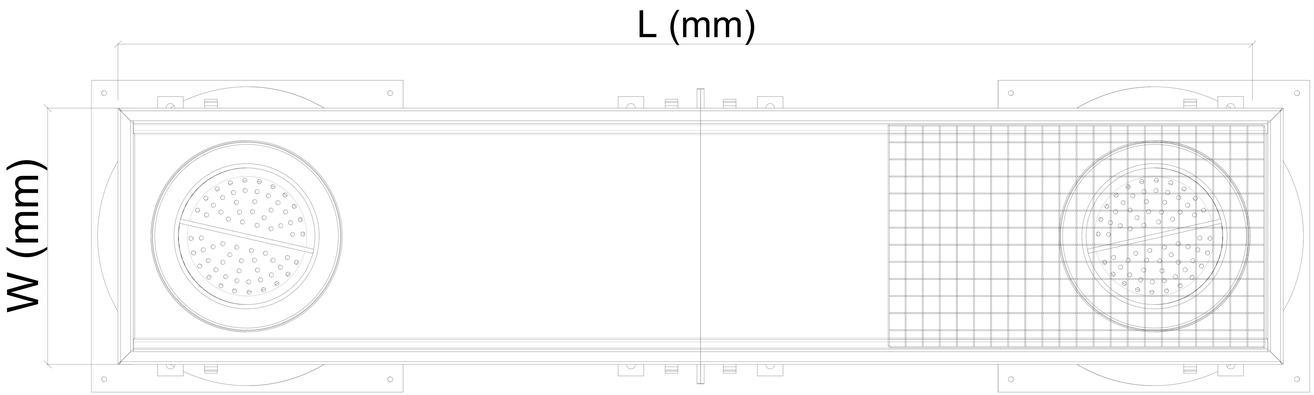

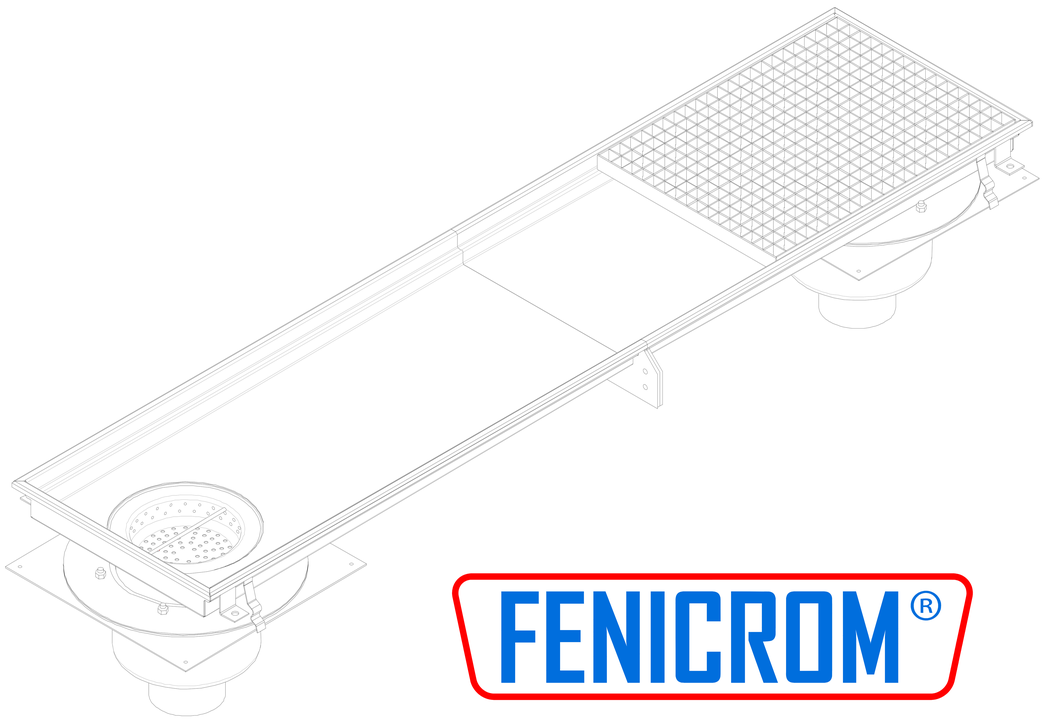

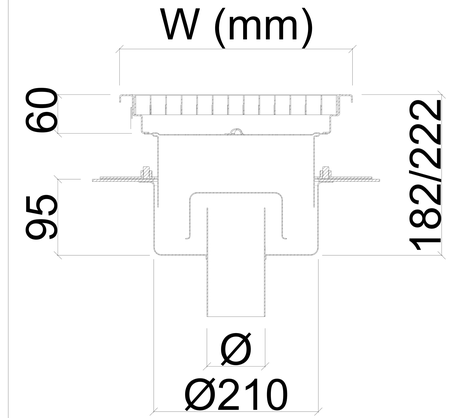

MODEL	W x L	H1-H2	Ø		
			DN50	DN70	DN100
DKA2G-326	300 x 2683	50-60	Ø50	Ø75	Ø110
DKA2G-329	300 x 2945				
DKA2G-331	300 x 3125				
DKA2G-333	300 x 3385				
DKA2G-335	300 x 3566				
DKA2G-338	300 x 3827				
DKA2G-340	300 x 4007				
DKA2G-342	300 x 4269				
DKA2G-344	300 x 4450				
DKA2G-347	300 x 4710				
DKA2G-348	300 x 4890				
DKA2G-351	300 x 5153				
DKA2G-353	300 x 5333				
Max. Flow Rate lt / min			50	50	70
Waterseal Height			50mm		

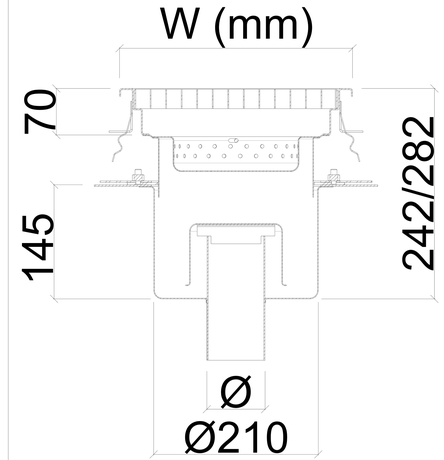

MODEL	W x L	H1-H2	Ø		
			DN50	DN70	DN100
DKA2G-326	300 x 2683	60-70	Ø50	Ø75	Ø110
DKA2G-329	300 x 2945				
DKA2G-331	300 x 3125				
DKA2G-333	300 x 3385				
DKA2G-335	300 x 3566				
DKA2G-338	300 x 3827				
DKA2G-340	300 x 4007				
DKA2G-342	300 x 4269				
DKA2G-344	300 x 4450				
DKA2G-347	300 x 4710				
DKA2G-348	300 x 4890				
DKA2G-351	300 x 5153				
DKA2G-353	300 x 5333				
Max. Flow Rate lt / min			50	50	70
Waterseal Height			60mm		

APPLICATION DRAWING

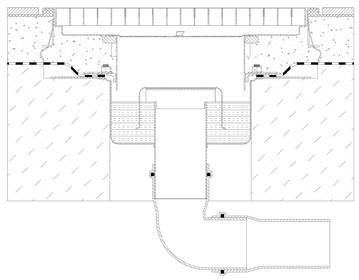

OPTIONAL

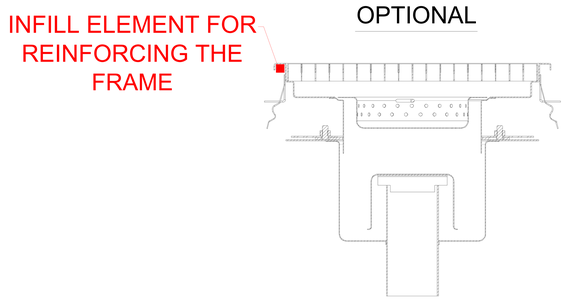

FENICROM®